The Formwork Experts.

Safe transporting, stacking and storing

Lifting panels upright / turning panels over

Only use approved lifting devices!

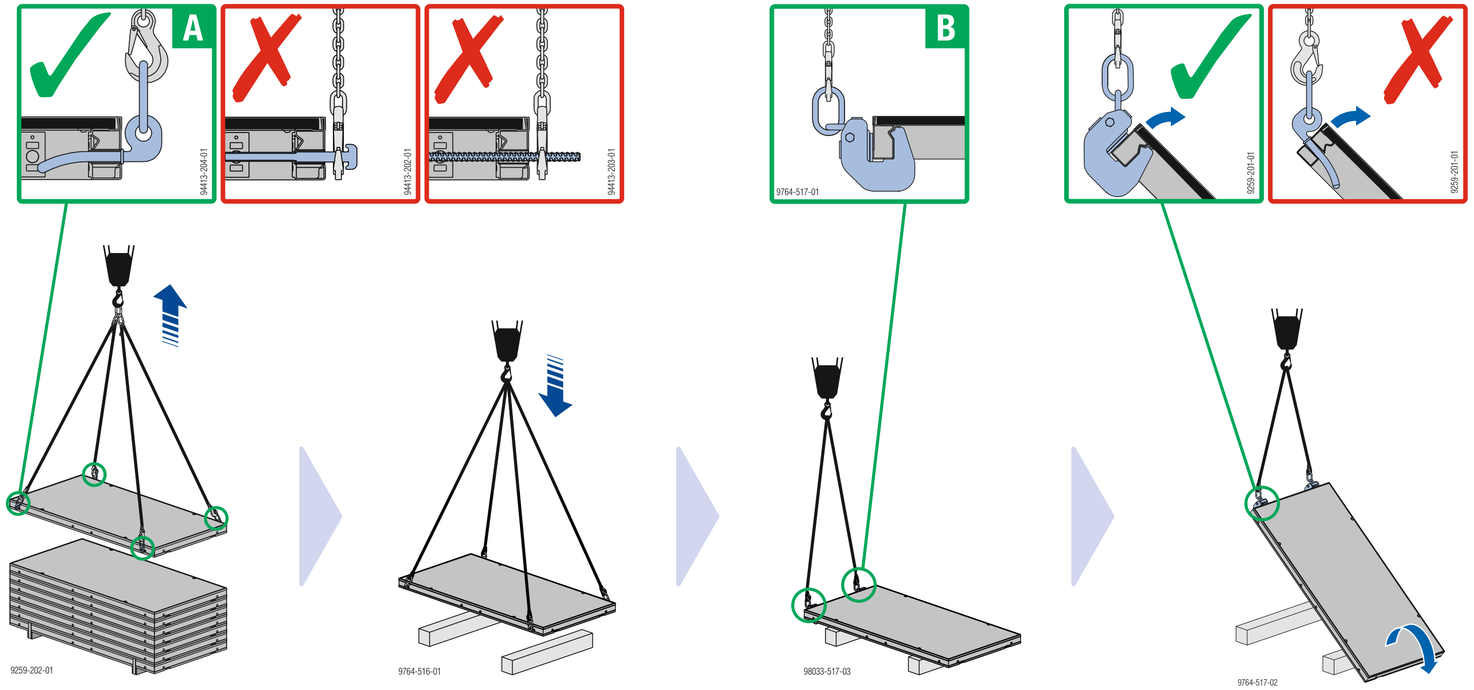

Framax transport gear
Art.-Nr. 588232000

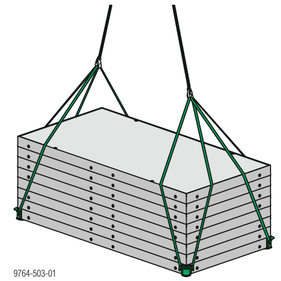

Bolt-on castor set B
Art.-Nr. 586168000

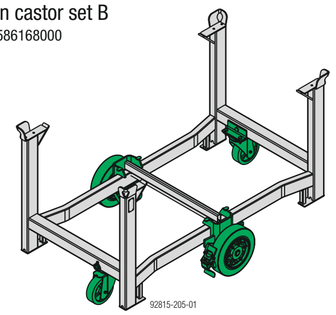

Framax transport bolt
Art.-Nr. 588621000

Framax lifting hook
Art.-Nr. 588149000

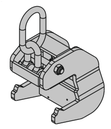

Framax stacking cone
Art.-Nr. 588234000

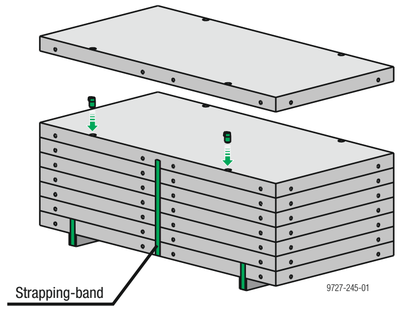

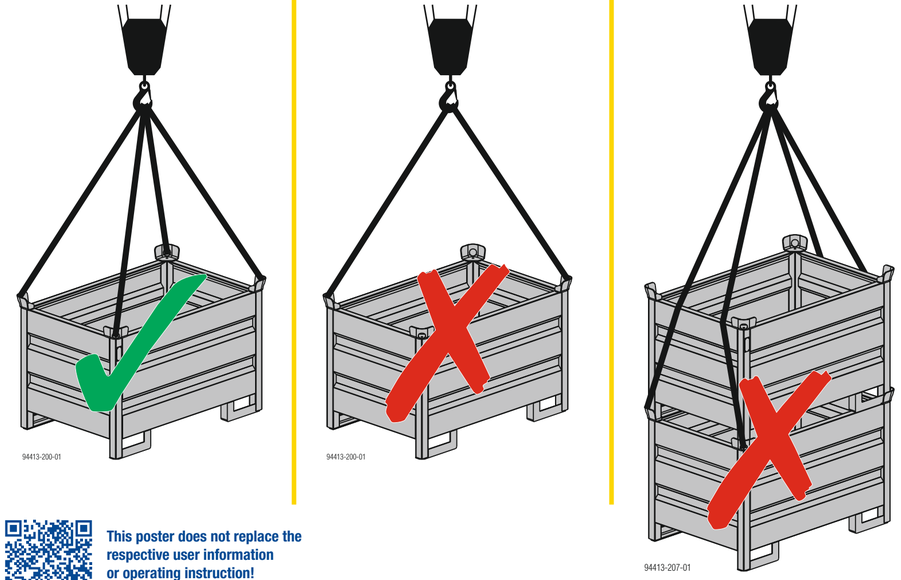

This poster does not replace the respective user information or operating instruction!
www.doka.com/downloadcenter

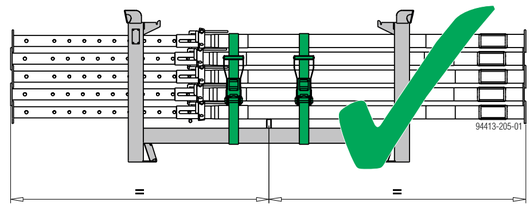

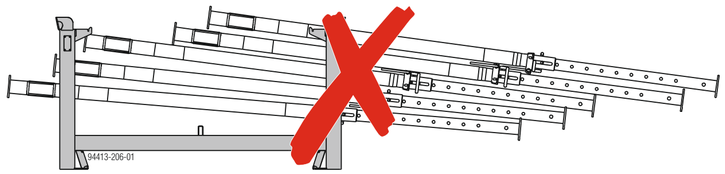

Pile up max. 3 multi-trip transport boxes!

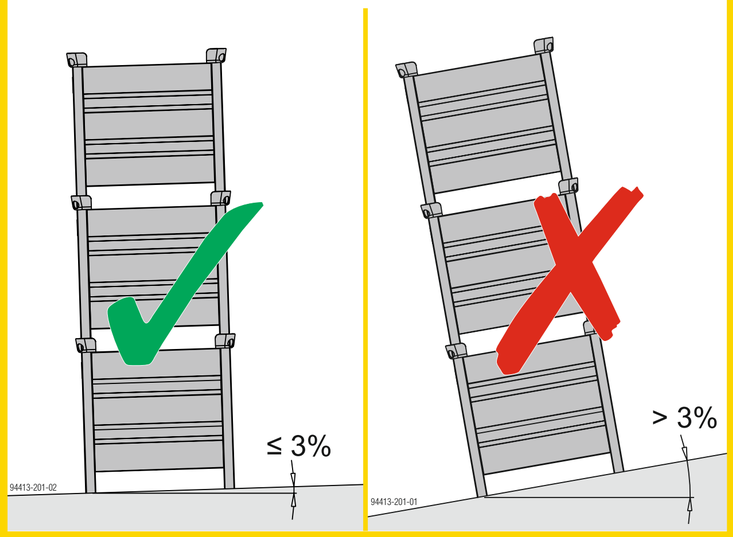

999441302 en-GB - 05/2018