The Formwork Experts.

Anchoring on the structure - Folding platform K

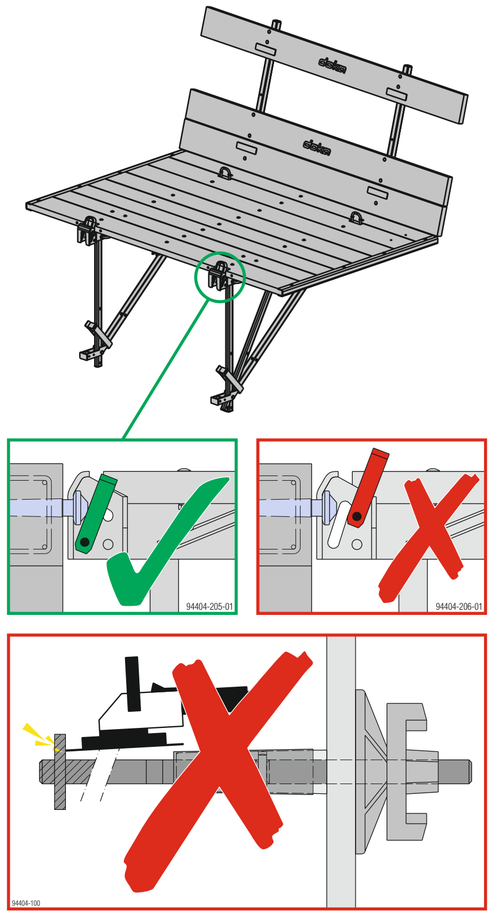

Positioning point

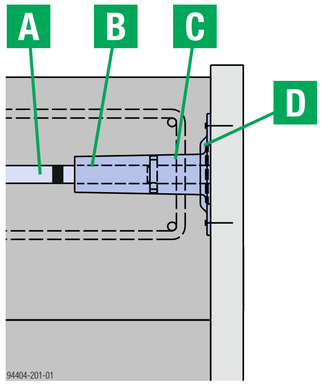

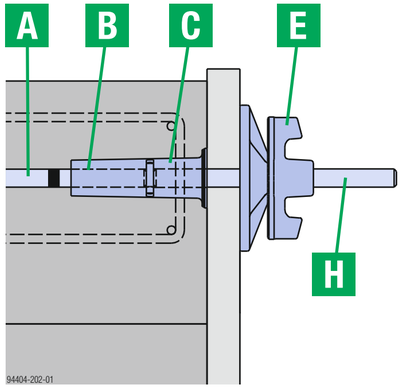

Standard - Suspension point

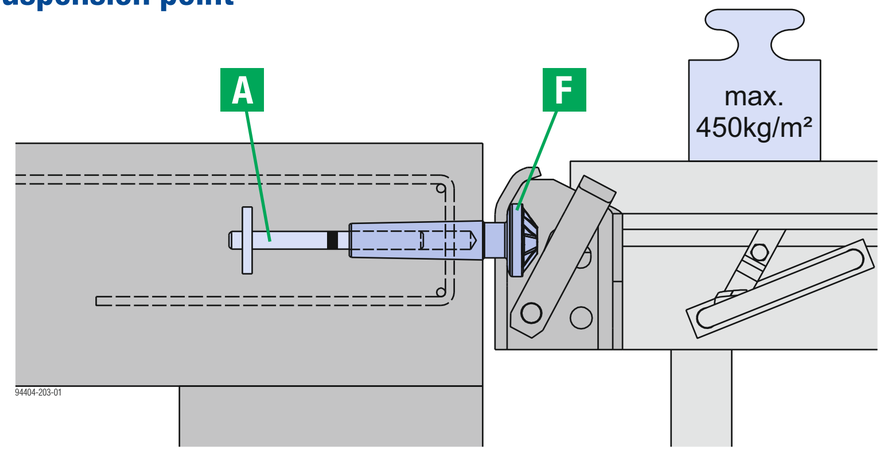

Retrofitted suspension point in concrete

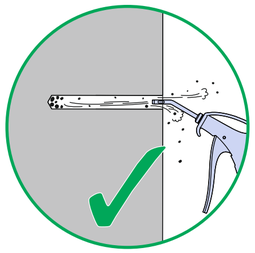

Read and follow the installation instructions!

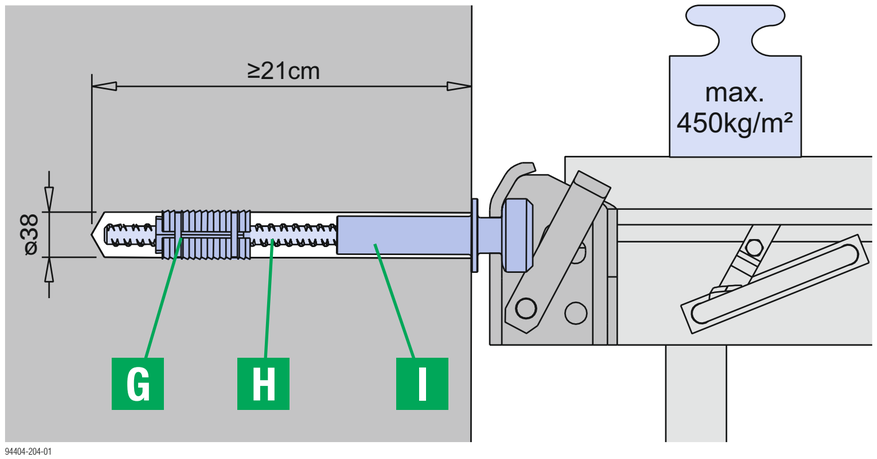

Tools

Tie-rod wrench 15.0/20.0
Art.-Nr. 580594000

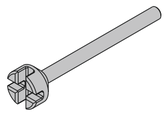

Reversible ratchet 1/2"
Art.-Nr. 580580000

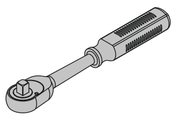

Positioning cone spanner 15.0 DK
Art.-Nr. 580579000

Tensioning instrument B
Art.-Nr. 580570000

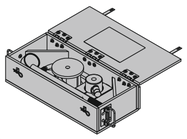

This poster does not replace the respective user information!
www.doka.com/downloadcenter

Stop anchor 15.0 16cm 55 **A**
Art.-Nr. 581997000

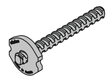

Cantilever positioning cone 15.0 5cm **B**
Art.-Nr. 581699000

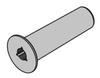

Sealing sleeve S 15.0 5cm **C**
Art.-Nr. 581697000

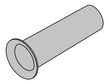

Fixing plate 15.0 **D**
Art.-Nr. 581692000

Super plate 15.0 **E**
Art.-Nr. 581966000

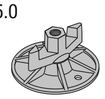

Suspension cone 15.0 5cm **F**
Art.-Nr. 581971000

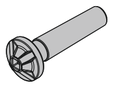

Rock anchor spreader unit 15.0 **G**
Art.-Nr. 581120000

Tie rod 15,0 **H**

Suspension cone 15.0 with collar **I**
Art.-Nr. 580428000

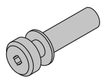

999441001 en-GB - 11/2017