The Formwork Experts.

Anchoring on the structure - Bracket platform M

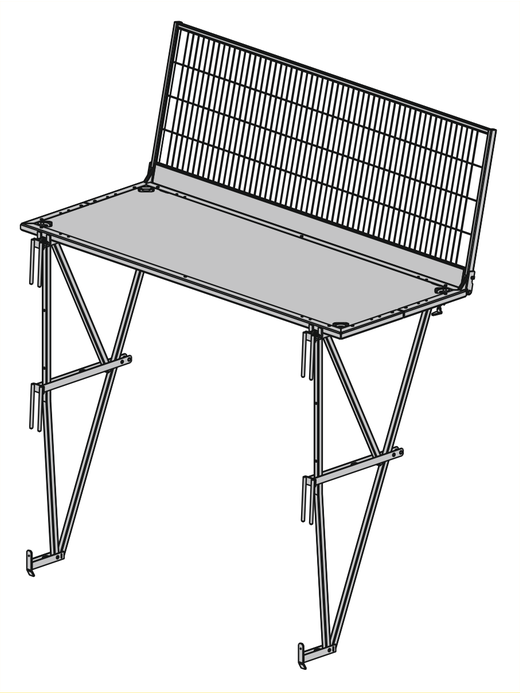

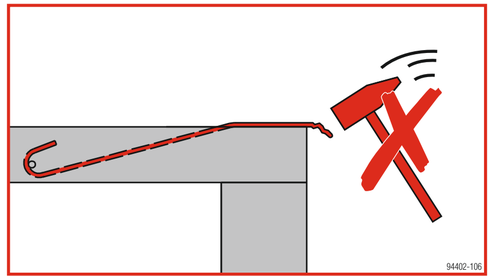

Use Suspension loops only with reinforcement!

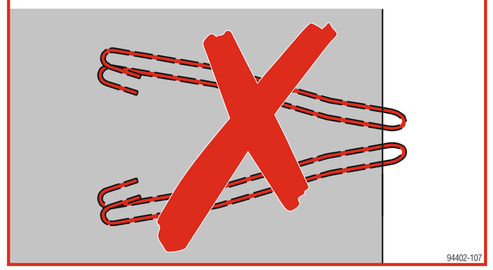

This poster does not replace the respective user information!
www.doka.com/downloadcenter

Standard suspension point

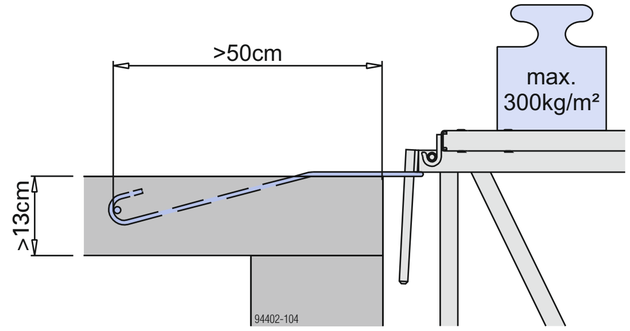

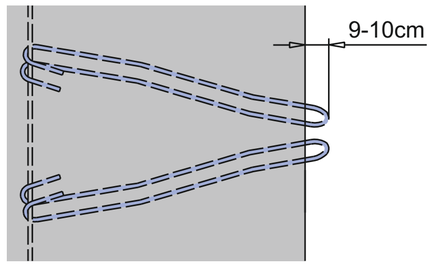

Suspension loop ES
Art.-Nr. 580458000

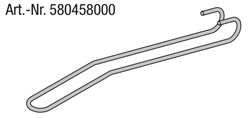

Suspension in wall

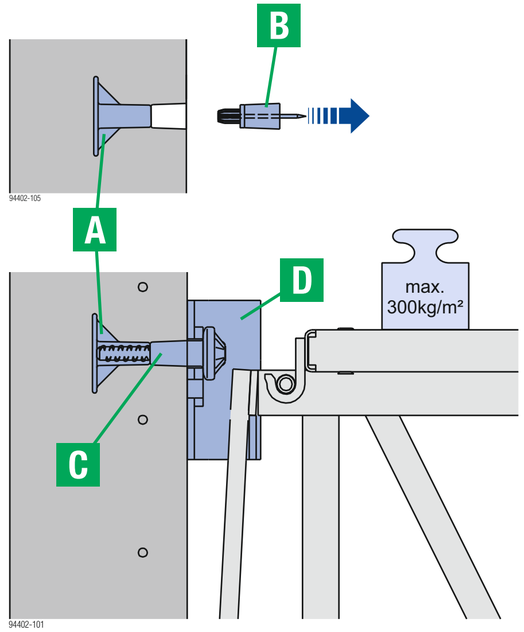

Bridge edge beam anchor 15.0 **A**
Art.-Nr. 581896000

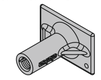

Nailing cone 15.0 **B**
Art.-Nr. 581897000

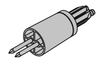

Screw-in cone 15.0 **C**
Art.-Nr. 581895000

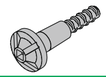

Suspension shoe M **D**
Art.-Nr. 580557000

Retrofitted suspension point in concrete

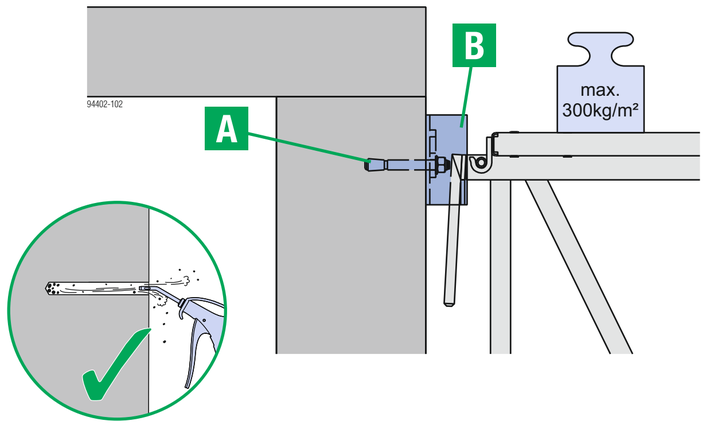

Read and follow the installation instructions!

Dowel as per structural design calculation **A**

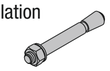

Suspension shoe M **B**
Art.-Nr. 580557000

Retrofitted suspension point in masonry

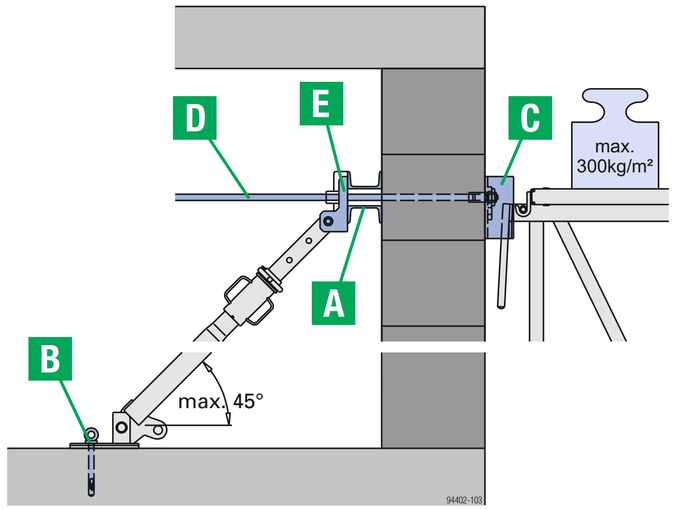

Multi-purpose waling WS 10 Top50 **A**

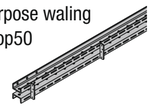

Doka express anchor 16x125mm **B**
Art.-Nr. 588631000

Suspension shoe M **C**
Art.-Nr. 580557000

Wall anchor M **D**
Art.-Nr. 580559000

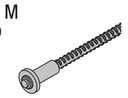

Anchor bracket M **E**
Art.-Nr. 580558000

999440902.en-GB - 11/2017