999432002 - 07/2023
en-GB

The Formwork Experts.

Doka Express anchor 16x125mm

User Information

Instructions for assembly and use (Method statement)

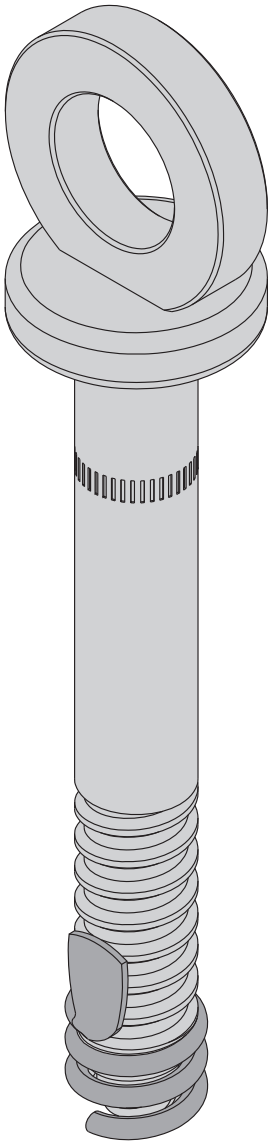

© by Doka GmbH, A-3300 Amstetten

Installation and dismounting

Installation

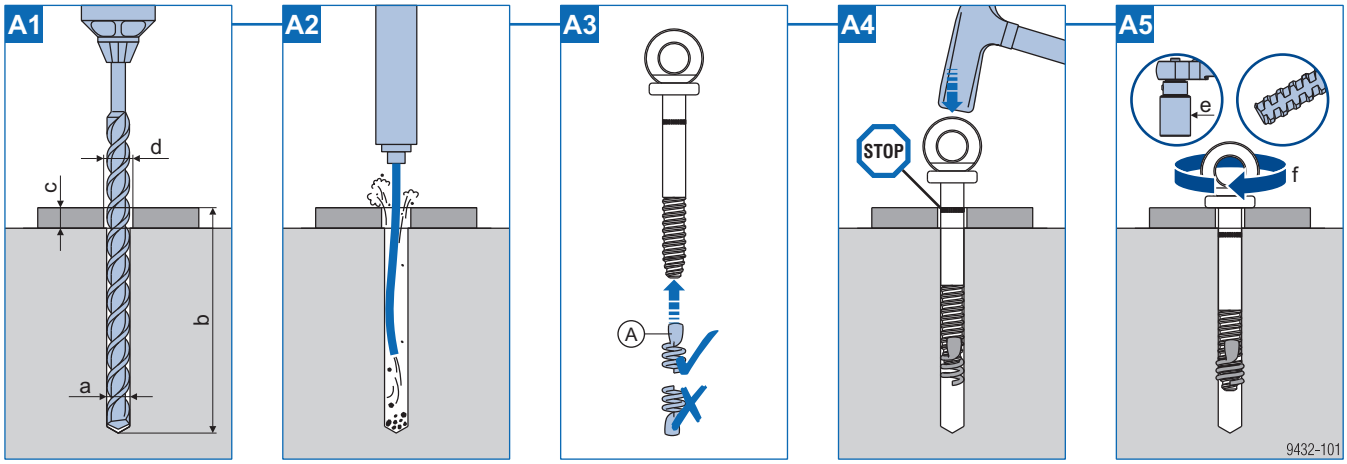

Animation: https://player.vimeo.com/video/281800669

WARNING

- Use Doka coils 16mm only with Doka express anchors 16x125mm.
- Do not under any circumstances use Doka coils 16mm with other threaded fasteners or anchors.
- Screw the Doka coil 16mm onto the Doka express anchor 16x125mm only in the direction indicated. Do not pre-spread.
- The express anchor may only be re-used after performing a check for wear with the **Gauge for Doka express anchor 16x125mm**, and provided that this check has been successfully passed.

Dismounting and check for reusability

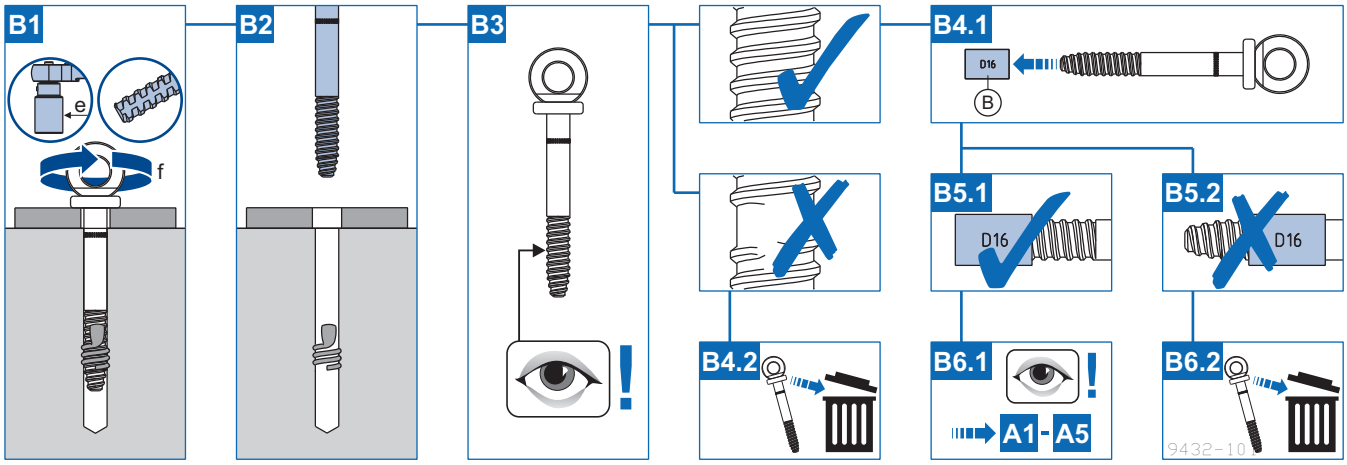

a ... Nominal drill diameter 16 mm
b ... Depth of drilled hole 135 mm (The depth of the drilled hole b can be reduced by dimension c.)
c ... max. thickness of attached part 15 mm
d ... Diameter of hole drilled in the attached part 17-25 mm
e ... Width across flats 36 mm
f ... Torque T_{min} 180 Nm

A Doka coil 16mm (lost part in every use)
B Gauge for Doka express anchor 16x125mm

Structural design

Permissible values of temporary fixing points in uncracked concrete

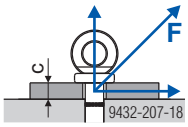

c ... max. thickness of attached part 15 mm

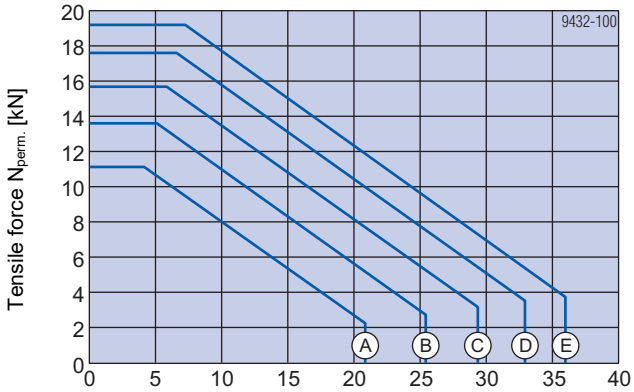

A	C8/10 ($f_{ck,cube,current}$ = 10 N/mm²)
B	C12/15 ($f_{ck,cube,current}$ = 15 N/mm²)
C	C16/20 ($f_{ck,cube,current}$ = 20 N/mm²)
D	C20/25 ($f_{ck,cube,current}$ = 25 N/mm²)
E	C25/30 ($f_{ck,cube,current}$ = 30 N/mm²)

Boundary conditions

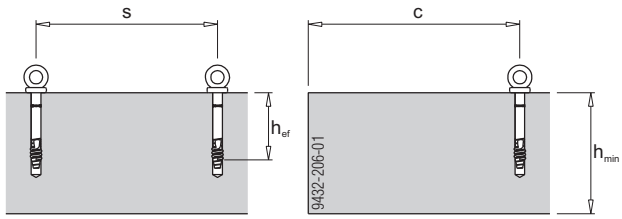

Anchoring depth h_{ef} ... 85 mm
Building-element thickness h_{min} ... 200 mm
Distance from edge c ... 400 mm
Distance s from one another ... min. 1200 mm

The following simplified values may be used:

- Permitted load in C8/10 concrete with $f_{ck,cube,current}$ ≥ 10 N/mm²:
  $F_{perm.}$ = 11.1 kN (R_d = 16.65 kN)
- Permitted load in C20/25 concrete with $f_{ck,cube,current}$ ≥ 25 N/mm²:
  $F_{perm.}$ = 17.6 kN (R_d = 26.4 kN)

NOTICE

If boundary conditions differ, always comply with the data in the relevant approval:

- Z-21.8-2033 (anchorage)
- Z-14.9-760 (attachment point for personal fall-arrest systems (PFAS))

Permissible values of back-stays on ring (values apply to uncracked concrete)

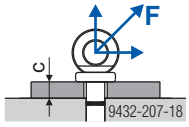

c ... max. thickness of attached part 15 mm

Permitted load where $f_{ck,cube}$ ≥ 10 N/mm²:
$F_{perm.}$ = 10.0 kN (R_d = 15.0 kN)

NOTICE

If the ring is damaged (deformed), it is not permitted to use this back-stay!

Attachment point for personal fall-arrest systems (PFAS)

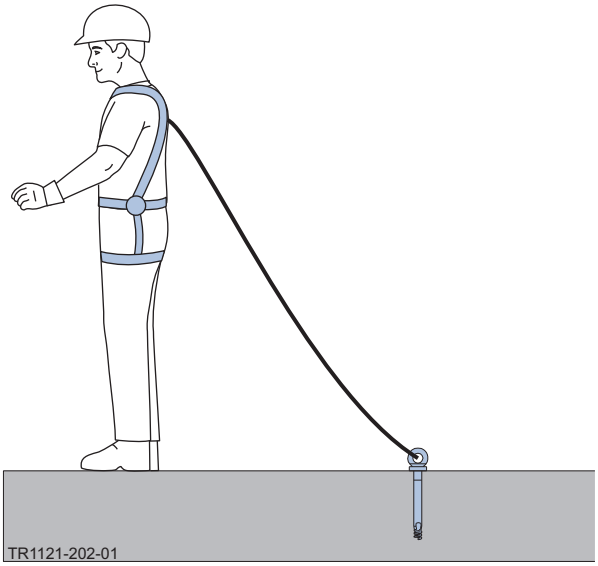

The express anchor can also be used as an attachment point for personal fall-arrest systems (e.g. safety harness) and as a securing point if a person falls.
The installation and removal procedures are as stated in this User Information booklet.

- Minimum cube compressive strength of the concrete $f_{ck,cube,min}$ = 10 N/mm²
- Installation in cracked and uncracked concrete

Back-from-edge installation

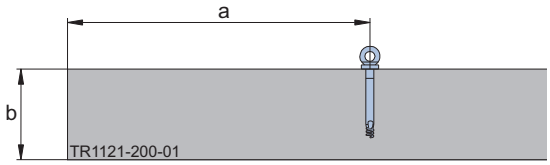

a ...Minimum edge distance 600 mm
b ...Minimum structural-component thickness 180 mm

Close-to-edge installation

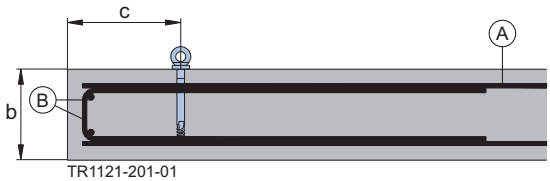

b ...Minimum structural-component thickness 180 mm
c ...Minimum edge distance 225-600 mm

A	Minimum surface reinforcement
B	Hoop and edge reinforcement

Reinforcement necessary for close-to-edge installation

- Minimum surface reinforcement
  $a_{s,x} = a_{s,y}$ = 1.96 cm²/m arranged orthogonally in the anchorage concrete.
- Hoop reinforcement Ø ≥ 8mm at 150 mm spacing and edge reinforcement in the form of 2 longitudinal reinforcing bars Ø ≥ 12 mm in the corners.

NOTICE

- Immediately replace express anchors that are damaged or strained by a fall.
- Use of the Doka express anchor as an attachment point for personal fall-arrest systems is restricted to 6 months and a maximum of 1 user!
- The installation date of the Doka express anchor has to be written on the '**information plate for express anchor**' with a black waterproof marker (durability 6 months).

Practical example

	[kg]	Article N°
Doka express anchor 16x125mm Doka-Expressanker 16x125mm 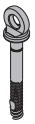 Galvanised Length: 18 cm	**0.31**	**588631000**
Doka coil 16mm Doka-Coil 16mm Galvanised Diameter: 1.6 cm	**0.009**	**588633000**
Gauge for Doka express anchor 16x125mm Lehre Doka-Expressanker 16x125mm Black Length: 3 cm Diameter: 2 cm	**0.03**	**588632000**
Information plate for express anchor Plakette Expressanker PS Width: 8 cm Height: 7.5 cm	**0.10**	**588630000**

[kg]	Article N°

Near to you, worldwide

Doka is one of the world leaders in developing, manufacturing and distributing formwork technology for use in all fields of the construction sector.

With more than 160 sales and logistics facilities in over 70 countries, the Doka Group has a highly efficient distribution network which ensures that equipment and technical support are provided swiftly and professionally.
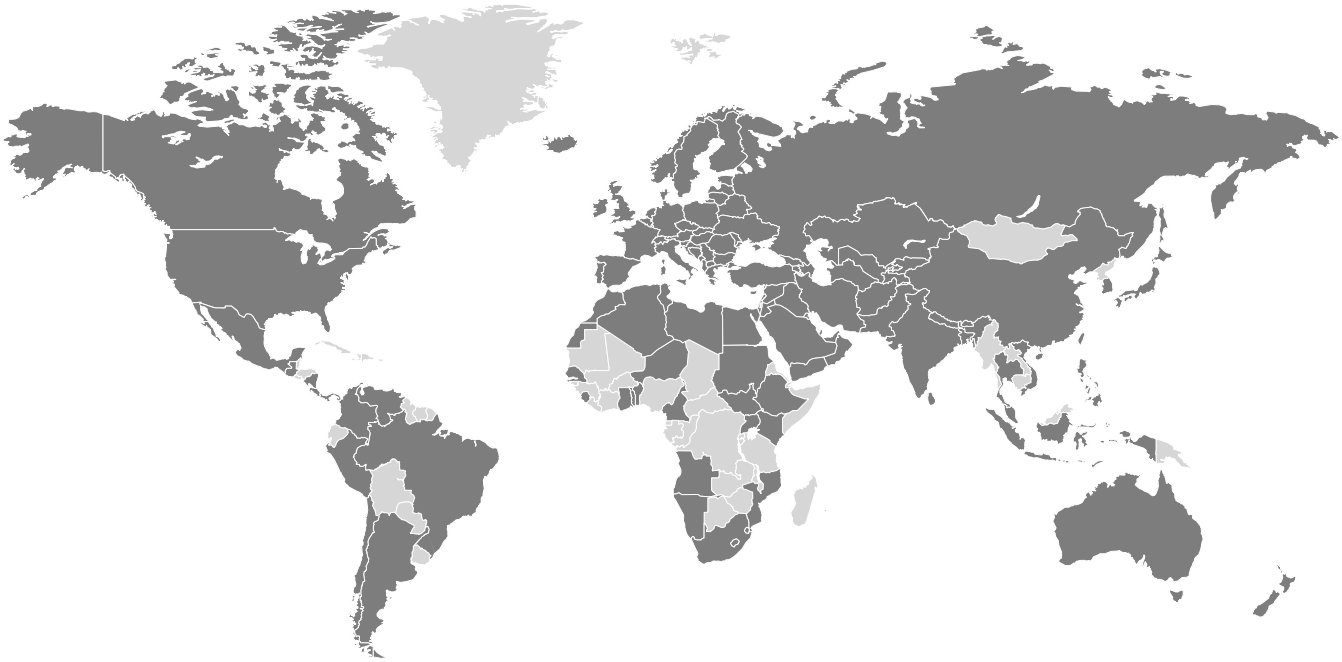
An enterprise forming part of the Umdasch Group, the Doka Group employs a worldwide workforce of more than 6000.